NO.	ECN NO.	DESCRIPTION	REV.	DRAW	DATE

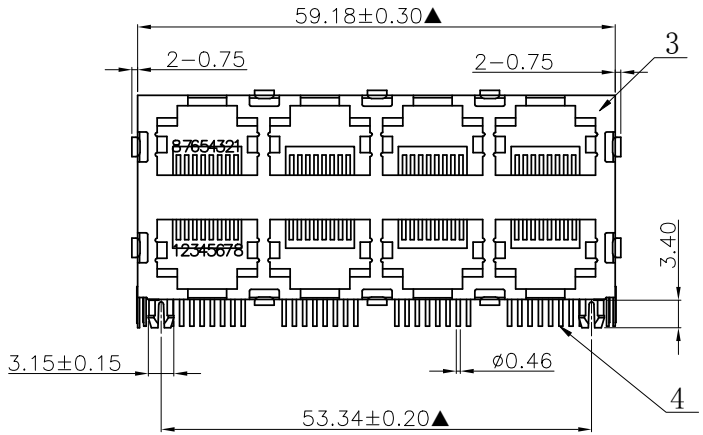

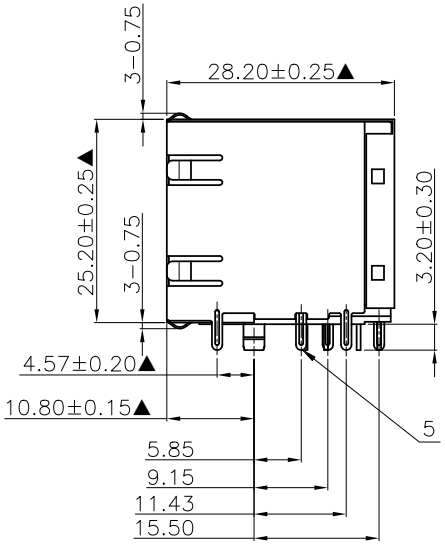

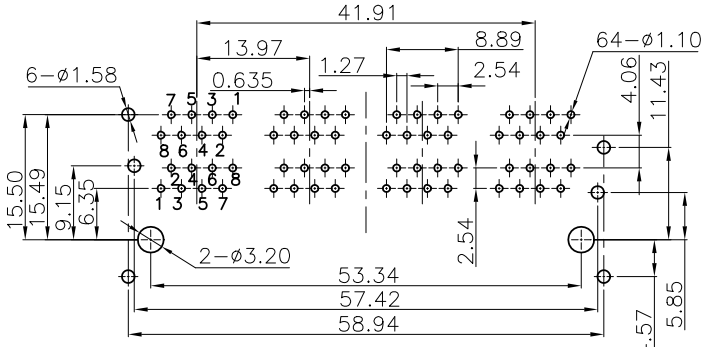

RECOMMENDED P.C.B LAYOUT TOP VIEW
(COMPONENT SIDE DIM`±0.05)

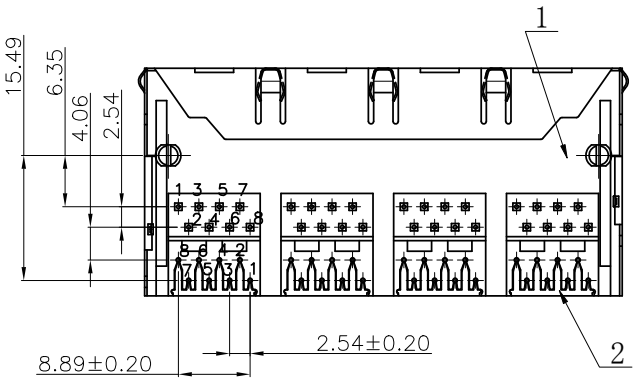

43014-11 G X X 1

规格流水码

电镀代码
- 05-G/F
- 11-3u″
- 15-6u″
- 19-15u″
- 23-30u″

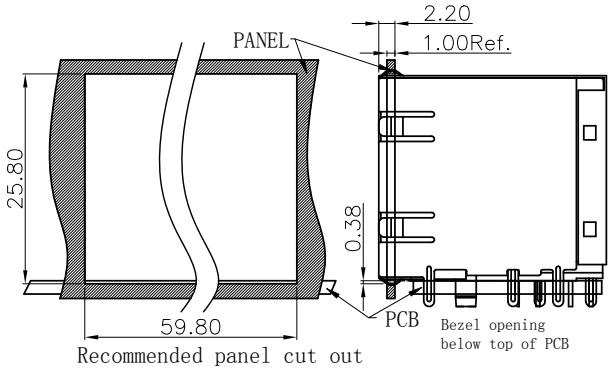

Recommended panel cut out

MATERIALS:

1. Housing:Glass Filled PA46 BLACK UL94V-0(ROHS).
2. Insert:Glass Filled PBT UL94V-0(ROHS).
3. Shielding: T=0.20mm (ROHS).
4. Contact:0.46mm DIA. Phosphor Bronze gold Plating Over Nickel(ROHS).
5. Welding post: T=0.20mm (ROHS).

※MATES WITH MODULAR PLUG CONFORMING TO FCC PART 68,SUBPART F.

※The Dimensions Marked″▲″ Symbols Are Stand For Key Characteristics.

产品客户图 Customer Drw								
未注公差 TOLERANCE UNLESS OTHERWISE SPECIFIED		.X	±0.35	GLGNET ® 深圳市方向电子股份有限公司 SHEN ZHEN GLGNET ELECTRONICS CO. ,LTD.				
		.XX	±0.25					
		.XXX	±0.15					
		X°	±3°					
比例 SCALE	1:1	角法 PROJ.		设计 DESIGN			品名 TITLE	5921-S-FK10-A-2x4-8C-11
张数 SHEET	1/1	大小 SIZE	A4	校对 CHECKED			料号 ITEM NO.	43014-11GXX1
单位 UNIT	mm	版本 REV.	A0	核准 APPROVED			图号 DWG NO.	GLG-WO-064