NO.	ECN NO.	DESCRIPTION	REV.	DRAW	DATE

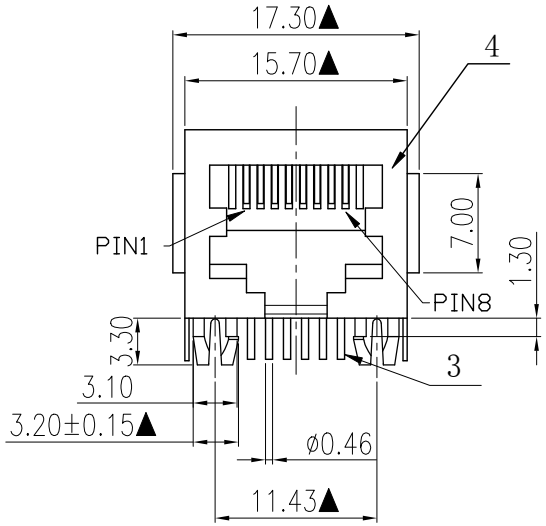

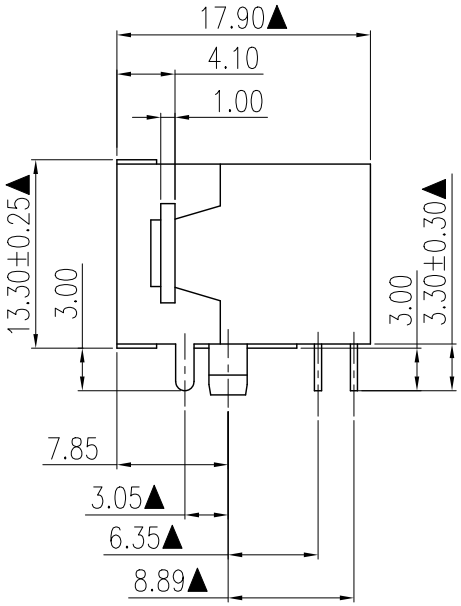

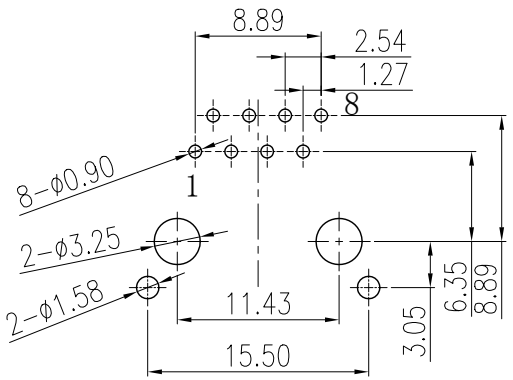

RECOMMENDED P.C.B LAYOUT TOP VIEW
(COMPONENT SIDE TOLERANCE:±0.05)

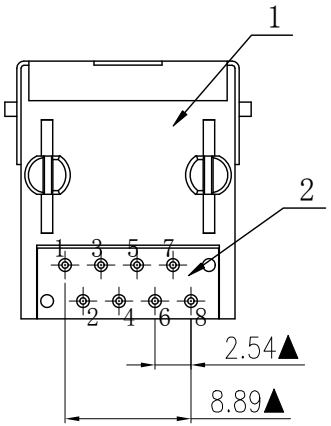

41052-0 6 G X X 1

规格流水码

电镀代码
- 05-G/F
- 11-3u"
- 15-6u"
- 19-15u"

Mechanical Characteristic:

1. Housing:Glass Filled PA46 Black UL94V-0(RoHS).
2. Insert:Glass Filled PBT UL94V-0(ROHS).
3. Contact:0.46mm DIA Phosphor Bronze gold Plating Over Nickel(RoHS).
4. Shielding:0.20mm Thickness Copper Alloy with Nickel Plated(RoHS).

※MATES WITH MODULAR PLUG CONFORMING TO FCC PART 68,SUBPART F.

※The Dimensions Marked"▲" Symbols Are Stand For Key Characteristics.

产品客户图 Customer Drw								
未注公差 TOLERANCE UNLESS OTHERWISE SPECIFIED	.X	±0.35	GLGNET ® 深圳市方向电子股份有限公司 Shenzhen GLGNET Electronics Co.,LTD.					
	.XX	±0.25						
	.XXX	±0.15						
	X°	±2°						
比例 SCALE	1:1	角法 PROJ.		设计 DESIGN			品名 TITLE	5921-T-D-R-10P8C-06
张数 SHEET	1/1	纸张 SIZE	A4	校对 CHECKED			料号 ITEM NO.	41052-06GXX1
单位 UNIT	mm	版本 REV.	A0	核准 APPROVED			图号 DWG NO.	GLG-WO-116